TIOMOS 160

160° wide-angle hinge (door thicknesses up to 32 mm)

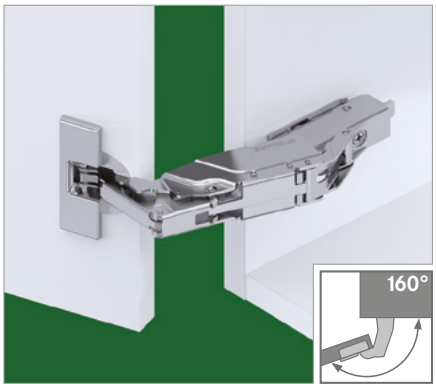

- 160° opening angle
- Convenient depth adjustment via worm gear
- For cabinets with inset drawers or pull-out shelves
- Optimum reveals for door thicknesses up to 32 mm
- 3-dimensional adjustment with appropriate mounting plate
- Minimum reveals
- Shallow cup depth

Available in 3 versions:

- With integrated damper (3 adjustable damping levels)
- Without integrated damper
- Without self-closing mechanism (without spring)

ORDER INFORMATION FOR DRILLING PATTERN 45/9.5

Door overlay		Cranking	Damper		without spring	Art.-no.		
			with	without		Click-on For screw fixing	Click-on For press fitting	Impresso without tools
Full overlay [1]		0	■	-	-	**F028**138**561**	**F028**138**564**	**F017**139**350**
			-	■	-	**F045**138**499**	**F045**138**502**	**F034**139**321**
			-	■	■	**F046**138**621**	–	**F035**139**378**
Overlay [1]		3	■	-	-	**F028**138**562**	**F028**138**565**	**F017**139**351**
			-	■	-	**F045**138**500**	**F045**138**503**	**F034**139**322**
			-	■	■	**F046**138**622**	–	**F035**139**379**
Half overlay [1]		9.5	■	-	-	**F028**138**563**	**F028**138**566**	**F017**139**352**
			-	■	-	**F045**138**501**	**F045**138**504**	**F034**139**323**
			-	■	■	**F046**138**623**	–	**F035**139**380**

[1] Cup material: Zamak, nickel-plated / Arm material: Zamak, nickel-plated

ACCESSORIES

	Designation	Art.-no.
	120° opening angle reduction clip	**F072**135**753**
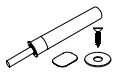	Tipmatic Pin for wooden and aluminium frame doors	**F069**135**396**

	Designation	Art.-no.
	Countersunk wood screw Ø 3.5 x 15 mm	**F146**073**976**
	Unclipping protector	**F072**135**807**

MITRED APPLICATION (ON ALL SIDES)

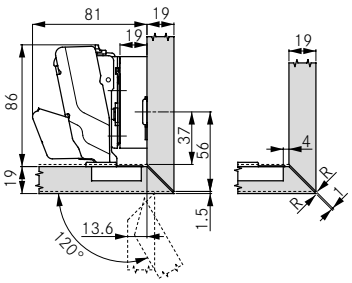

With 0 cranking, mounting plate height 19 mm and cup distance 4 mm, door and cabinet edges can meet at mitred angles on all 4 sides.

Use 120° opening angle reduction clip.

Door thickness (TS)	Mitred application circumferential	Mitred application lateral
	R (min.)	R (min.)
19-20	1.0	0
22	2.0	0
24	3.0	1.0
26	4.2	2.5
28	5.4	3.8
30	6.5	5.3

ZERO PROTRUSION

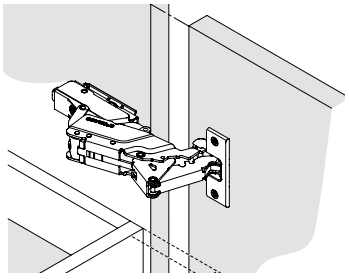

For cabinets with inset drawers.

At 0 cranking, and with all mounting plate thicknesses, the door protrudes inwards at 90°. With cranking size 3 and mounting plate height 3 mm, the door will be flush with the cabinet.

Tiomos mounting plates	102	Tipmatic	302	Assembly aids	354
Accessories	112	Technical information	116		

Packaging units are not covered in this brochure; please enquire with your supplier

INSTALLATION INFORMATION

All dimensions in millimetres

Full overlay K0

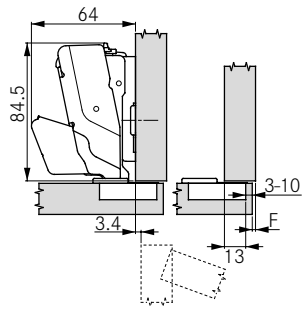

Mounting plate height 2

Door overlay \ Mounting plate height	0	Cup distance 3	4	5	6	7	8	9	10
27.0									-2
26.0								-2	
25.0							-2		0
24.0						-2		0	
23.0					-2		0		2
22.0				-2		0		2	3
21.0			-2		0		2	3	
20.0		-2		0		2	3		
19.0	-2		0		2	3			
18.5					3.5				
18.0	0			2	3				
17.5				3.5					
17.0			2	3					
16.5				3.5					
16.0	2		3						
15.5			3.5						
15.0	3								
14.5	3.5								

Overlay K3

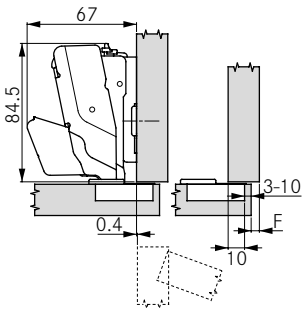

Mounting plate height 2

Door overlay \ Mounting plate height	3	Cup distance 3	4	5	6	7	8	9	10
24.0									-2
23.0								-2	
22.0							-2		0
21.0						-2		0	
20.0					-2		0		2
19.0				-2		0		2	3
18.0			-2		0		2	3	
17.0	-2			0		2	3		
16.5							3.5		
16.0			0		2	3			
15.5						3.5			
15.0	0			2	3				
14.5					3.5				
14.0			2	3					
13.5				3.5					
13.0	2		3						
12.5			3.5						
12.0	3								
11.5	3.5								

Half overlay K9.5

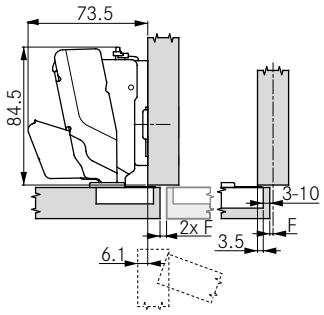

Mounting plate height 2

Door overlay \ Mounting plate height	9.5	Cup distance 3	4	5	6	7	8	9	10
17.5									-2
16.5								-2	
15.5							-2		0
14.5						-2		0	
13.5					-2		0		2
12.5				-2		0		2	3
11.5			-2		0		2	3	
10.5	-2			0		2	3		
10.0							3.5		
9.5			0		2	3			
9.0						3.5			
8.5	0			2	3				
8.0					3.5				
7.5			2	3					
7.0				3.5					
6.5	2		3						
6.0			3.5						
5.5	3								
5.0	3.5								

Inset [1] K0

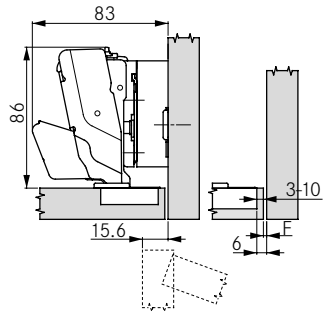

Cranking 0, mounting plate height 21

[1] Set mounting plate back by door thickness +1.5 mm

Door reveal \ Mounting plate height	0	Cup distance 3	4	5	6
0.0		19		21	
0.5					
1.0	19		21		
1.5					
2.0		21			
3.0	21				
4.0					

MINIMUM GAP

Door thickness \ Minimum gap	Cup distance 3	4	5	6	7	8	9	10
32.0	1.0	1.0						
31.0	1.0	1.0	1.0					
30.0	1.0	1.0	1.0					
29.0	1.0	1.0	1.0	1.0	1.0	1.0	1.0	1.0
28.0	1.0	1.0	1.0	1.0	1.0	1.0	1.0	1.0
26.0	1.0	1.0	1.0	1.0	1.0	1.0	1.0	1.0
25.0	1.0	1.0	1.0	1.0	1.0	1.0	1.0	1.0
24.0	1.0	1.0	1.0	1.0	1.0	1.0	1.0	1.0
22.0	1.0	1.0	1.0	1.0	1.0	1.0	1.0	1.0
21.0	1.0	1.0	1.0	1.0	1.0	1.0	1.0	1.0
20.0	1.0	1.0	1.0	1.0	1.0	1.0	1.0	1.0
18.0	1.0	1.0	1.0	1.0	1.0	1.0	1.0	1.0
16.0	1.0	1.0	1.0	1.0	1.0	1.0	1.0	1.0

MINIMUM REVEAL

Door thickness \ Minimum reveal (F)	Cup distance 3	4	5	6	7	8	9	10
32.0	0.2	0.2						
31.0	0.2	0.2	0.2	0.2				
30.0	0.2	0.2	0.2	0.2	0.2			
29.0	0.2	0.2	0.2	0.2	0.2	0.2	0.2	
28.0	0.0	0.0	0.0	0.0	0.0	0.0	0.0	0.0
26.0	0.0	0.0	0.0	0.0	0.0	0.0	0.0	0.0
25.0	0.0	0.0	0.0	0.0	0.0	0.0	0.0	0.0
24.0	0.0	0.0	0.0	0.0	0.0	0.0	0.0	0.0
22.0	0.0	0.0	0.0	0.0	0.0	0.0	0.0	0.0
21.0	0.0	0.0	0.0	0.0	0.0	0.0	0.0	0.0
20.0	0.0	0.0	0.0	0.0	0.0	0.0	0.0	0.0
18.0	0.0	0.0	0.0	0.0	0.0	0.0	0.0	0.0
16.0	0.0	0.0	0.0	0.0	0.0	0.0	0.0	0.0

only possible with 120° angle red. clip

NOTES

The minimum gap is the clearance required between the front edge of the cabinet and the closed door so that the door can open without hindrance.

Minimum reveal for doors with bevelled edges (R = 1 mm) (factory setting).

No reveal is required for door thicknesses up to 28 mm. From 29 mm door thickness, we recommend a trial fitting.

DRILLING PATTERNS 45/9.5

For screw fixing

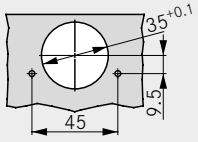

For press fitting

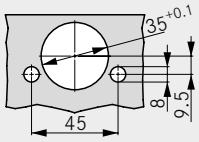

Combination drilling pattern for Impresso

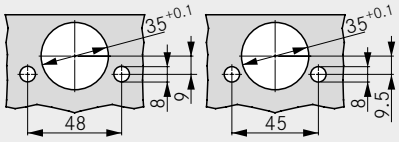

CUP DIMENSIONS

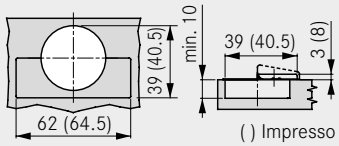

TIOMOS 160

160° wide-angle hinge (door thicknesses up to 32 mm)

ORDER INFORMATION FOR DRILLING PATTERN 48/9

Door overlay		Cranking	Damper		without spring	Art.-no.		
			with	without		Click-on For screw fixing	Click-on For press fitting	Impresso without tools
Full overlay [1]		0	■	-	-	F028138135	F028138138	F017139350
			-	■	-	F045138042	F045138045	F034139321
			-	■	■	F046138226	–	F035139378
Overlay [1]		3	■	-	-	F028138136	F028138139	F017139351
			-	■	-	F045138043	F045138046	F034139322
			-	■	■	F046138227	–	F035139379
Half overlay [1]		9.5	■	-	-	F028138137	F028138140	F017139352
			-	■	-	F045138044	F045138047	F034139323
			-	■	■	F046138228	–	F035139380

[1] Cup material: Zamak, nickel-plated / Arm material: Zamak, nickel-plated

DRILLING PATTERNS 48/9

For screw fixing

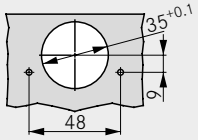

For press fitting

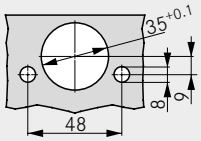

Combination drilling pattern for Impresso

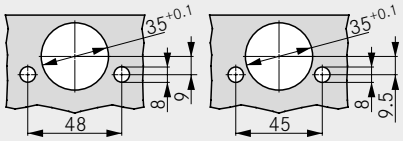

CUP DIMENSIONS

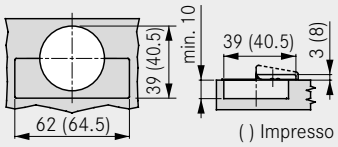

ORDER INFORMATION FOR DRILLING PATTERN 42/11

Door overlay		Cranking	Damper		without spring	Art.-no.		
			with	without		Click-on For screw fixing	Click-on For press fitting	Impresso without tools
Full overlay [1]		0	■	-	-	F028138379	F028138382	F017139435
			-	■	-	F045138317	F045138320	F034139406
			-	■	■	F046138439	–	F035139463
Overlay [1]		3	■	-	-	F028138380	F028138383	F017139436
			-	■	-	F045138318	F045138321	F034139407
			-	■	■	F046138440	–	F035139464
Half overlay [1]		9.5	■	-	-	F028138381	F028138384	F017139437
			-	■	-	F045138319	F045138322	F034139408
			-	■	■	F046138441	–	F035139465

[1] Cup material: Zamak, nickel-plated / Arm material: Zamak, nickel-plated

DRILLING PATTERNS 42/11

For screw fixing

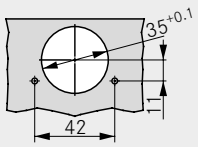

For press fitting

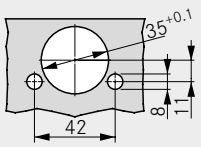

Combination drilling pattern for Impresso

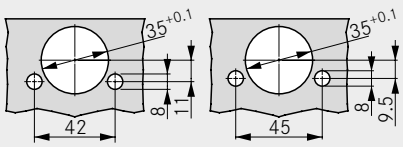

CUP DIMENSIONS

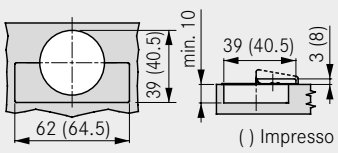

Tiomos mounting plates	102
Accessories	112
Tipmatic	302
Technical information	116
Assembly aids	354

Packaging units are not covered in this brochure; please enquire with your supplier

ORDER INFORMATION FOR DRILLING PATTERN 52/5.5

Door overlay		Cranking	Damper		without spring	Art.-no.		
			with	without		Click-on For screw fixing	Click-on For press fitting	Impresso without tools
Full overlay [1]		0	■	-	-	F028138743	F028138746	F017139520
			-	■	-	F045138681	F045138684	F034139491
			-	■	■	F046138803	–	F035139548
Overlay [1]		3	■	-	-	F028138744	F028138747	F017139521
			-	■	-	F045138682	F045138685	F034139492
			-	■	■	F046138804	–	F035139549
Half overlay [1]		9.5	■	-	-	F028138745	F028138748	F017139522
			-	■	-	F045138683	F045138686	F034139493
			-	■	■	F046138805	–	F035139550

[1] Cup material: Zamak, nickel-plated / Arm material: Zamak, nickel-plated

DRILLING PATTERNS 52/5.5

For screw fixing

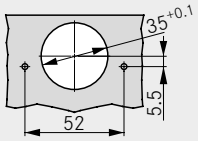

For press fitting

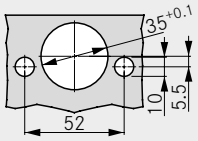

Combination drilling pattern for Impresso

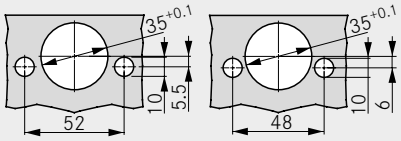

CUP DIMENSIONS

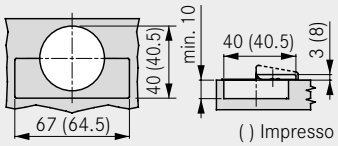

ORDER INFORMATION FOR DRILLING PATTERN 48/6

Door overlay		Cranking	Damper		without spring	Art.-no.		
			with	without		Click-on For screw fixing	Click-on For press fitting	Impresso without tools
Full overlay [1]		0	■	-	-	F028138925	F028138928	F017139520
			-	■	-	F045138863	F045138866	F034139491
			-	■	■	F046138985	–	F035139548
Overlay [1]		3	■	-	-	F028138926	F028138929	F017139521
			-	■	-	F045138864	F045138867	F034139492
			-	■	■	F046138986	–	F035139549
Half overlay [1]		9.5	■	-	-	F028138927	F028138930	F017139522
			-	■	-	F045138865	F045138868	F034139493
			-	■	■	F046138987	–	F035139550

[1] Cup material: Zamak, nickel-plated / Arm material: Zamak, nickel-plated

DRILLING PATTERNS 48/6

For screw fixing

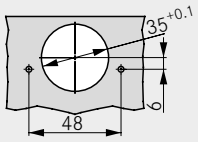

For press fitting

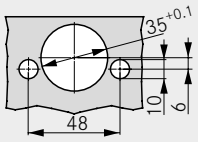

Combination drilling pattern for Impresso

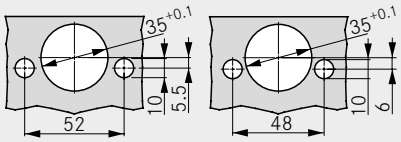

CUP DIMENSIONS

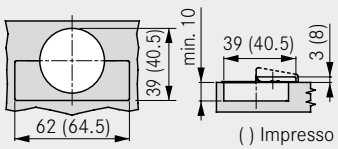

Tiomos mounting plates	102
Accessories	112
Tipmatic	302
Technical information	116
Assembly aids	354